LED가로등, 보안등, 투광등 전문 생산 업체

KDG
LED Lighting

KDG LED Lighting

케이디지전자(주)
KDG ELECTRONICS Co.,Ltd.

본사 : 경북 칠곡군 왜관읍 낙산리 646-4
TEL: 054-977-4353 FAX: 054-977-4357

인천지사 : 인천광역시 연수구 송도동 7-12번지
(부설연구소) TEL: 032-821-4353 FAX: 032-821-4356

www.kdgelc.co.kr

KDG LED Lighting

최고의 품질과 고객만족 서비스로
최선을 다하는 기업!

Company History

케이디지전자㈜는 자동차 조명 관련 전문기업으로서 신 성장동력 관련 제품을 연구 개발하고 있으며,
이어서 산업용 LED 조명 관련 초일류기업으로 거듭나기 위해 연구개발에 지속적인 투자를 아끼지 않습니다.
최고의 품질과 고객만족 서비스로 최선을 다하는 기업이 되겠습니다.

KDG Electronics as a company specializing in the automotive lighting is not only researching and developing new driving force products but not sparing continuous investment in R&D to be born again as a top notch company in the industrial LED Light business.

2014
02. 서울시 LED조명 실증단지 TEST, LED가로등 우수제품 선정

2013
조달우수제품(LED가로등, 보안등), 녹색 기업 및 제품인증
05. ISO 14001 Certification
08. Green technical Certification
12. Certificate of Designation of Excellent Product

2012
LED가로등, 보안등, 투광등 고효율 인증
01. KS Certification for floodlight
01. KS Certification for security light
10. Authentication of high efficiency for streetlight, security light, and floodlight
11. Designated as an outstanding supplier by Public Procurement Service

2011
LED가로등, 보안등 조달 등록
04. Registered as an official supplier of Public Procurement Service Patent for streetlight

2010
LED가로등, 보안등 KS 인증
12. KS certificate for streetlight

2009
01. Designated as Venture
07. Designated as INNO-BIZ
12. ISO/ TS16949

2007
기업부설연구소 설립
09. Establishment of KDG Electronics Research Institute Development of LED streetlight and flood light

2006
06. Designated as a promising export medium and small sized company
07. Outstanding PL Company

2004
03. Renault-Samsung Motors LED lamp development and manufacturing SQ Hyundai Motors and KIA Motors

2001
공장준공 및 케이디지전자(주) 법인 전환
03. Completion of plant and incorporated as KDG Electronics Co., Ltd.

1999
현대자동차 LED램프 개발 생산
11. Hyundai Motors LED lamp development and manufacturing

1998
케이디지전자(주) 설립
08. Establishment of KDG Electronics

About KDG

R&D Capability in LED Light Development

- DESIGN
- 배광, 광학 및 방열 설계
- 열 해석 및 제어기술
- 전자회로 설계

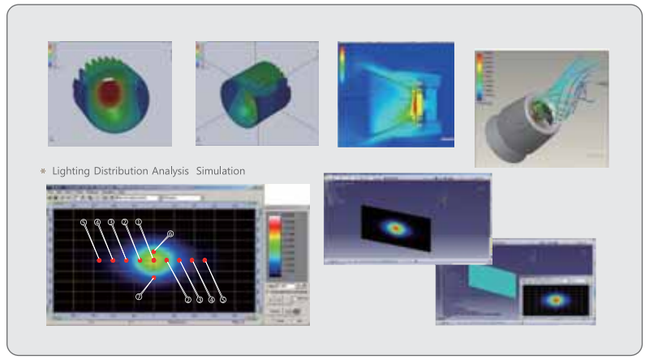

- DESIGN
- Light, Reflector, Optic/ Radiant heat Simulation
- Optimization of lighting distribution
- Thermal analysis and control
- Circuit design for stability

LED Light Manufacturing Facilities

- 사출→AI증착→하드코팅→모듈조립→완제품조립
- 품질 검사

- Injection
- Coating(Hard coating, Al deposition)
- Assembly
- Inspection

Korea standard Certification

ISO 14001 Certification

Certificate of Designation of Excellent Product

Green technical Certification

조달청 등록 특허 등록 제품 한국기술표준 고효율 기자재

LED Security Light 보안등
(30-50W)

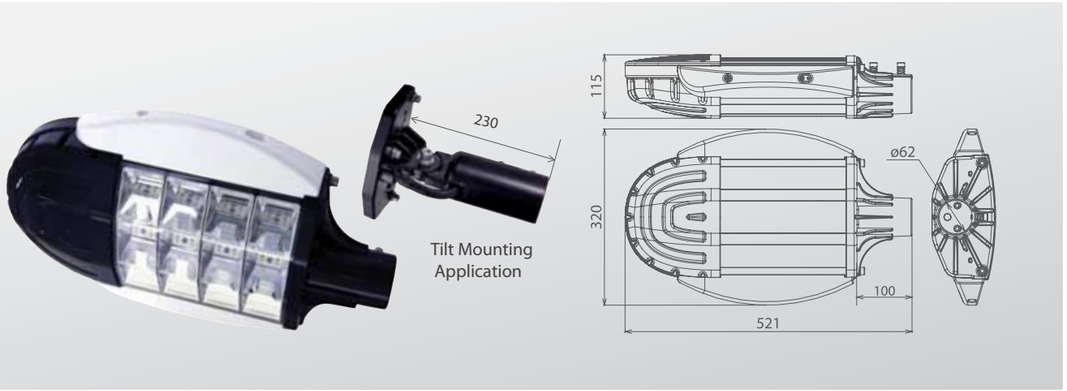

Application

· 컨버터 내/외장형
· 100W 수은등, 나트륨등 대체
· 4~6M 보안등용

· Internal/External converter type
· For replacement of existing 100W sodium vapor lamp
· For 4~6M security lighting

Illumination

luminance Intensity Distribution (30W)

Unit : lx (5m) Unit : cd

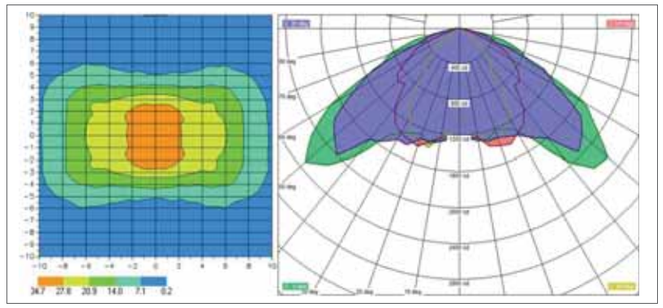

Specification

Model	Color [K]	CRI	Flux [Im]	Efficiency [Im/W]	Beam Angle[°]	Power [W]	Input [VAC]	Lens	Weight [Kg]
KDG-SL-03001	5,700	78	3,000	100	140 Max.	30	200-240	PC	5.5
KDG-SL-03001A	5,000	78	3,000	100	140 Max.	30	200-240	PC	5.5
KDG-SL-04001	5,700	78	4,000	100	140 Max.	40	200-240	PC	5.5
KDG-SL-04001A	5,000	78	4,000	100	140 Max.	40	200-240	PC	5.5
KDG-SL-05001	5,700	78	5,000	100	140 Max.	50	200-240	PC	5.5
KDG-SL-05001A	5,000	78	5,000	100	140 Max.	50	200-240	PC	5.5

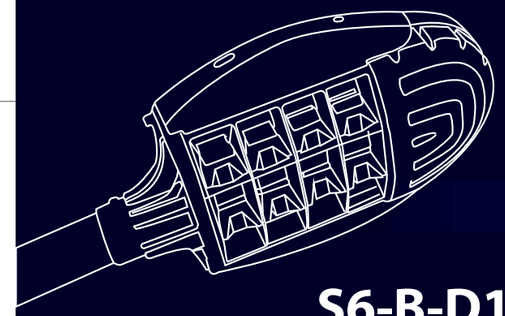

Security Light 50W
보안등

S6-B-D1-E

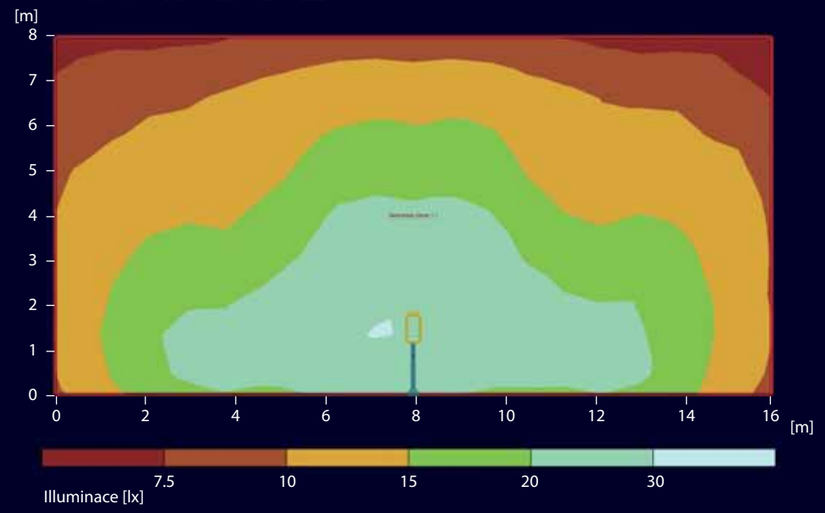

General

Calculation algorithm used		Average indirect fraction
photometric centre height.		6.00 m
Maintenance factor		0.80
Total luminous flux of all lamps		5023 lm
Total power		50.0 W
Total power per area (128.00 m²)		0.39 W/m² (2.47 W/m²/100lx)
Height of the reference plane		: 0.00 m
Average illuminance	Eav	: 15.8 lx
Minimum illuminance	Emin	: 6.8 lx
Maximum illuminance	Emax	: 30.5 lx
Uniformity Uo	Emin/Eav	: 1 : 2.32 (0.43)
Diversity Ud	Emin/Emax	: 1 : 4.47 (0.22)

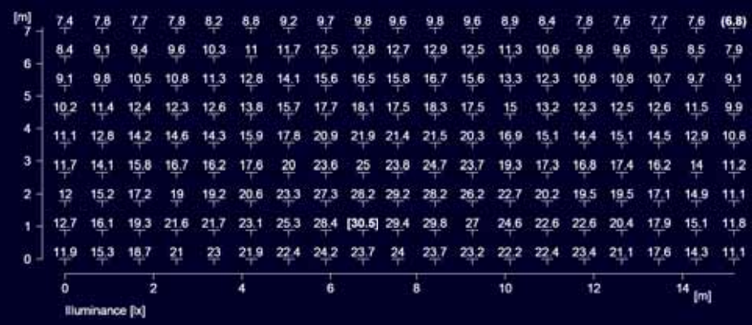

조달청 우수제품 조달청 등록 특허 등록 제품 한국기술표준 고효율 기자재 녹색인증

KDG LED Lighting

LED Security Light 가로등 · 보안등

(60-100W)

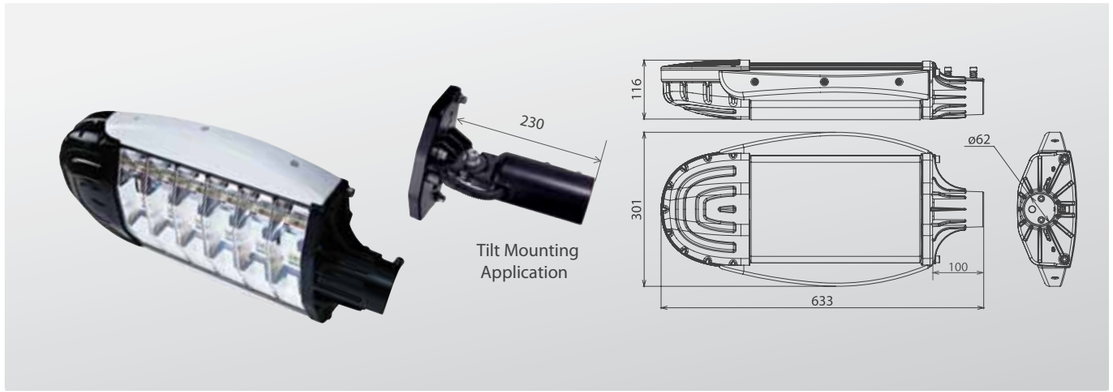

Application

· 컨버터 외장형
· 250W 수은등, 나트륨등 대체
· 6~8M 보안등, 가로등용

· External converter type
· For replacement of existing 250W sodium vapor lamp
· For 6~8M security lighting Street lighting

Illumination

luminance Intensity Distribution (80W)

Unit : lx (8m) Unit : cd

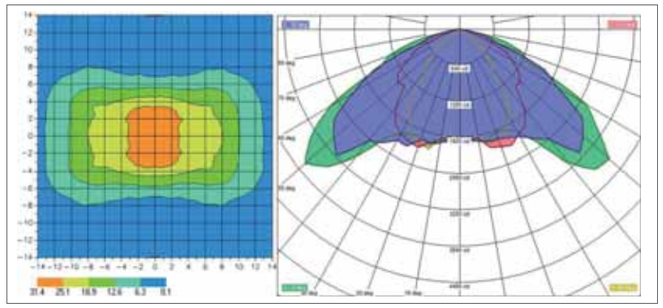

Specification

Model	Color [K]	CRI	Flux [lm]	Efficiency [lm/W]	Beam Angle[°]	Power [W]	Input [VAC]	Lens	Weight [Kg]
KDG-SL-06001	5,700	78	6,000	100	140 Max.	60	200-240	PC	6.2
KDG-SL-06001A	5,000	78	6,000	100	140 Max.	60	200-240	PC	6.2
KDG-SL-08001	5,700	78	8,000	100	140 Max.	80	200-240	PC	6.2
KDG-SL-08001A	5,000	78	8,000	100	140 Max.	80	200-240	PC	6.2
KDG-SL-10001	5,700	78	10,000	100	140 Max.	100	200-240	PC	6.2
KDG-SL-10001A	5,000	78	10,000	100	140 Max.	100	200-240	PC	6.2

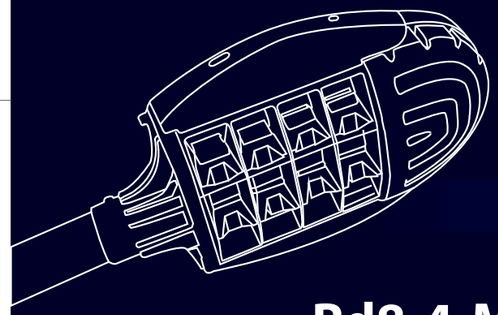

Security Light 80W

가로등 · 보안등

Rd8-4-M3-R3-B

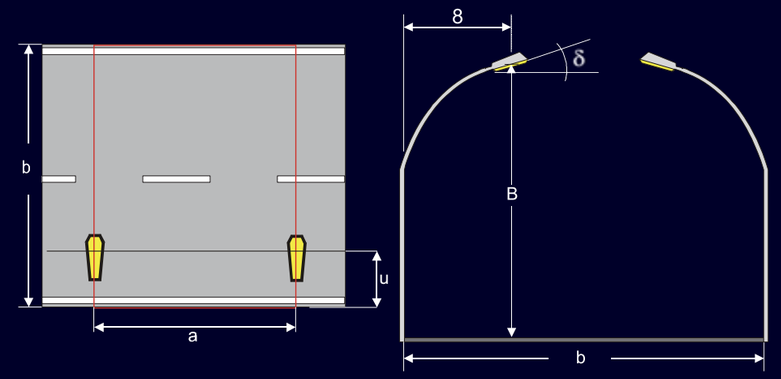

Luminaire data

Manufacturer	: KDG Electronics
Order No	. : 1
Luminaire name	: KDG-SL-08001
Equipment	: 1 x Unknown / 8004 lm

Road layout	: without central reservation	Luminaire placing	: Both sides
Width of roadway	(b) : 14.00 m	photometric centre height.	(h) : 8.00 m
No. of lanes	: 4	Luminaire spacing	(a) : 24.00 m
Road surface category	: R3	Luminaires - outreach	(u) : 1.50 m
q0	: 0.08	Inclination	(d) : 5.00°
Right hand drivers		Maintenance factor	: 0.80

Luminance

Observer location 1	: x=-60.00m, y= 1.75m, z=1.50m	
Average	: 1.52 cd/m²	(ME3b min. 1)
Uo (min/average)	: 0.59	(ME3b min. 0.4)
Observer location 2	: x=-60.00m, y=5.25m, z=1.50m	
Average	: 1.53 cd/m²	(ME3b min. 1)
Uo (min/average)	: 0.63	(ME3b min. 0.4)
Observer location 3	: x=-60.00m, y=8.75m, z=1.50m	
Average	: 1.53 cd/m²	(ME3b min. 1)
Uo (min/average)	: 0.63	(ME3b min. 0.4)
Observer location 4	: x=-60.00m, y=12.25m, z=1.50m	
Average	: 1.53 cd/m²	(ME3b min. 1)
Uo (min/average)	: 0.6	(ME3b min. 0.4)

Longitudinal uniformity

UI (B1: x = -60.00, y = 1.75, z = 1.50)	: 0.58	(ME3b min. 0.6)
UI (B2: x = -60.00, y = 5.25, z = 1.50)	: 0.61	(ME3b min. 0.6)
UI (B3: x = -60.00, y = 8.75, z = 1.50)	: 0.53	(ME3b min. 0.6)
UI (B4: x = -60.00, y = 12.25, z = 1.50)	: 0.56	(ME3b min. 0.6)

Glare/ surrounding brightness

TI (B2: y=8.75m)	: 6 %	(ME3b max. 15)
SR	: 0.68	(ME3b min. 0.5)

Horizontal illuminance E

Height of the reference plane		: 0.00 m
Average illuminance	Eav	: 23.3 lx
Minimum illuminance	Emin	: 16.9 lx
Maximum illuminance	Emax	: 28.1 lx
Uniformity Uo	min/average	: 1 : 1.38 (0.72)
Diversity Ud	min/max	: 1 : 1.67 (0.6)

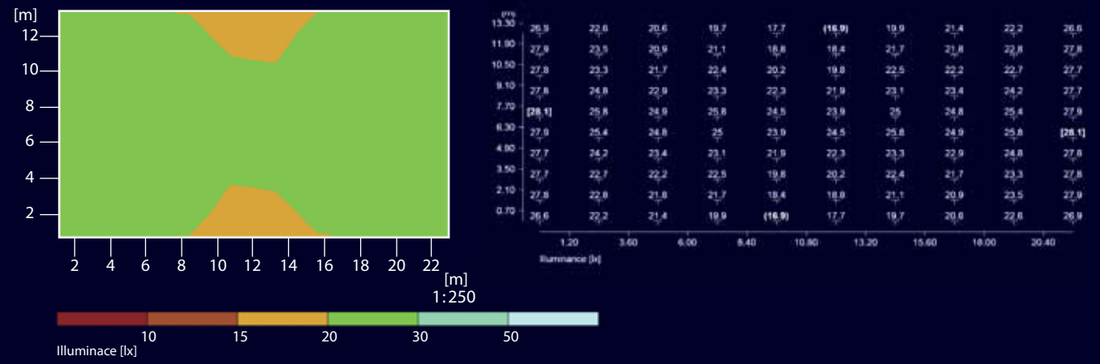

조달청 우수제품 조달청 등록 특허 등록 제품 한국기술표준 고효율 기자재 녹색인증

KDG LED Lighting

LED Streetlight 가로등

(120/150W)

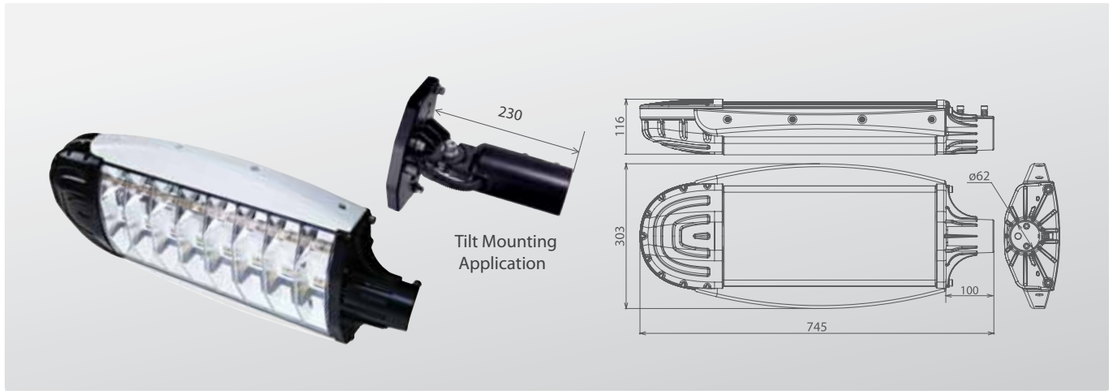

Application

· 컨버터 외장형
· 250W 수은등, 나트륨등 대체
· 8~10M 가로등용

· External converter type
· For replacement of existing 250W sodium vapor lamp
· For 8~10M Street lighting

Illumination

luminance Intensity Distribution (120W)

Unit : lx (10m) Unit : cd

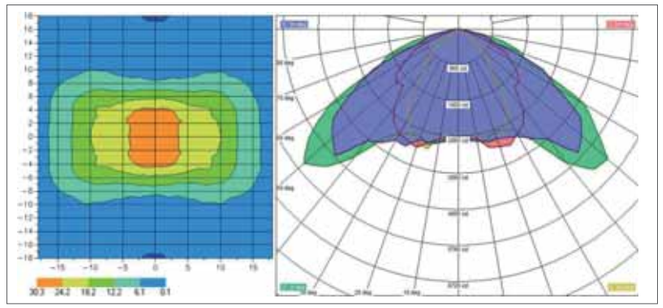

Specification

Model	Color [K]	CRI	Flux [lm]	Efficiency [lm/W]	Beam Angle[°]	Power [W]	Input [VAC]	Lens	Weight [Kg]
KDG-SL-12001	5,700	78	12,000	100	140 Max.	120	200-240	PC	7.4
KDG-SL-12001A	5,000	78	12,000	100	140 Max.	120	200-240	PC	7.4
KDG-SL-15001	5,700	78	15,000	100	140 Max.	150	200-240	PC	7.4
KDG-SL-15001A	5,000	78	15,000	100	140 Max.	150	200-240	PC	7.4

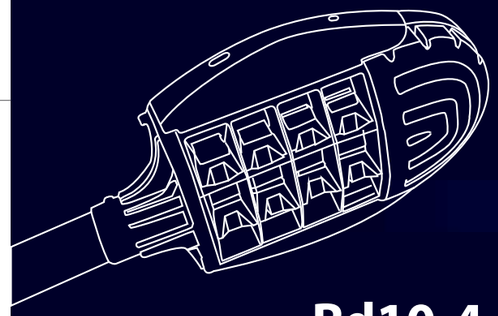

Streetlight 120W

가로등

Rd10-4-M3-R3-B

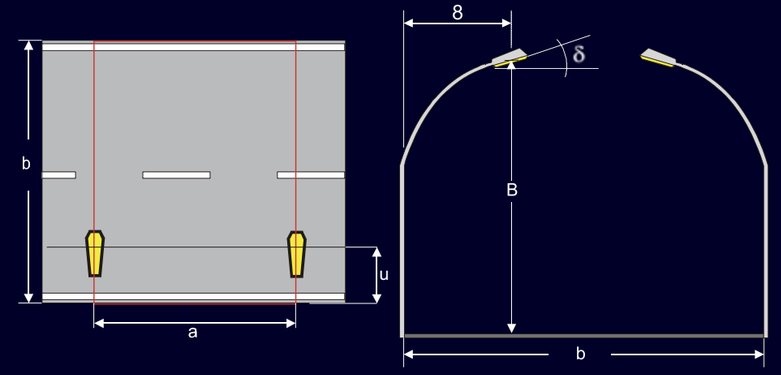

Luminaire data

Manufacturer	: KDG Electronics		
Order No	: 1		
Luminaire name	: KDG-SL-12001		
Equipment	: 1 x Unknown / 12016 lm		
Road layout	: without central reservation	Luminaire placing	: Both sides
Width of roadway	(b) : 14.00 m	photometric centre height.	(h) : 10.00 m
No. of lanes	: 4	Luminaire spacing	(a) : 30.00 m
Road surface category	: R3	Luminaires - outreach	(u) : 1.50 m
q0	: 0.08	Inclination	(d) : 5.00°
Right hand drivers		Maintenance factor	: 0.80

Luminance

Observer location 1	: x=-60.00m, y= 1.75m, z=1.50m	
Average	: 1.67 cd/m²	(ME3b min. 1)
Uo (min/average)	: 0.57	(ME3b min. 0.4)
Observer location 2	: x=-60.00m, y=5.25m, z=1.50m	
Average	: 1.68 cd/m²	(ME3b min. 1)
Uo (min/average)	: 0.6	(ME3b min. 0.4)
Observer location 3	: x=-60.00m, y=8.75m, z=1.50m	
Average	: 1.68 cd/m²	(ME3b min. 1)
Uo (min/average)	: 0.6	(ME3b min. 0.4)
Observer location 4	: x=-60.00m, y=12.25m, z=1.50m	
Average	: 1.67 cd/m²	(ME3b min. 1)
Uo (min/average)	: 0.6	(ME3b min. 0.4)

Longitudinal uniformity

UI (B1: x = -60.00, y = 1.75, z = 1.50)	: 0.57	(ME3b min. 0.6)
UI (B2: x = -60.00, y = 5.25, z = 1.50)	: 0.63	(ME3b min. 0.6)
UI (B3: x = -60.00, y = 8.75, z = 1.50)	: 0.63	(ME3b min. 0.6)
UI (B4: x = -60.00, y = 12.25, z = 1.50)	: 0.57	(ME3b min. 0.6)

Glare/ surrounding brightness

TI (B2: y=5.25m)	: 5 %	(ME3b max. 15)
SR	: 0.75	(ME3b min. 0.5)

Horizontal illuminance E

Height of the reference plane		: 0.00 m
Average illuminance	Eav	: 25.9 lx
Minimum illuminance	Emin	: 18.4 lx
Maximum illuminance	Emax	: 34.9 lx
Uniformity Uo	min/average	: 1 : 1.41 (0.71)
Diversity Ud	min/max	: 1 : 1.9 (0.53)

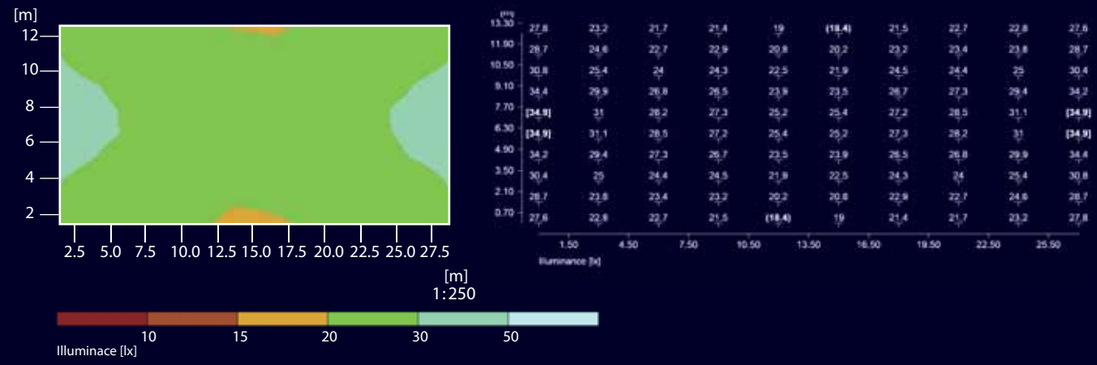

조달청 등록 특허 등록 제품 한국기술표준 고효율 기자재

KDG LED Lighting

LED Streetlight 가로등

(160-200W)

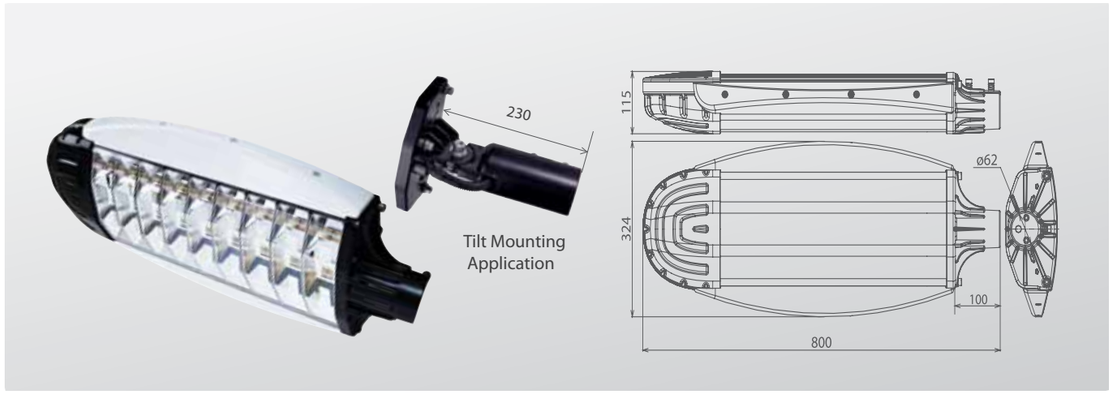

Application

· 컨버터 외장형
· 400W 수은등, 나트륨등 대체
· 10~12M 가로등용

· External converter type
· For replacement of existing 400W sodium vapor lamp
· For10~12M Street lighting

Illumination

luminance Intensity Distribution (160W)

Unit : lx (12m) Unit : cd

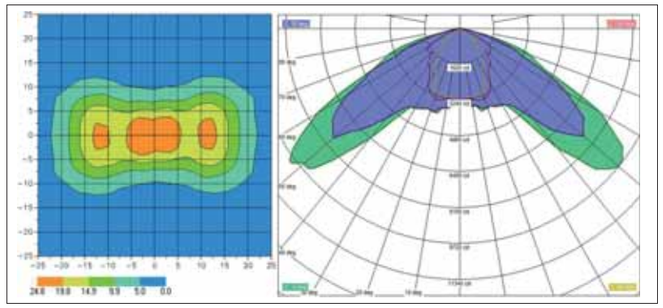

Specification

Model	Color [K]	CRI	Flux [lm]	Efficiency [lm/W]	Beam Angle[°]	Power [W]	Input [VAC]	Lens	Weight [Kg]
KDG-SL-16001	5,700	78	16,000	100	140 Max.	160	200-240	PC	8
KDG-SL-16001A	5,000	78	16,000	100	140 Max.	160	200-240	PC	8
KDG-SL-18001	5,700	78	18,000	100	140 Max.	180	200-240	PC	8
KDG-SL-18001A	5,000	78	18,000	100	140 Max.	180	200-240	PC	8
KDG-SL-20001	5,700	78	20,000	100	140 Max.	200	200-240	PC	8
KDG-SL-20001A	5,000	78	20,000	100	140 Max.	200	200-240	PC	8

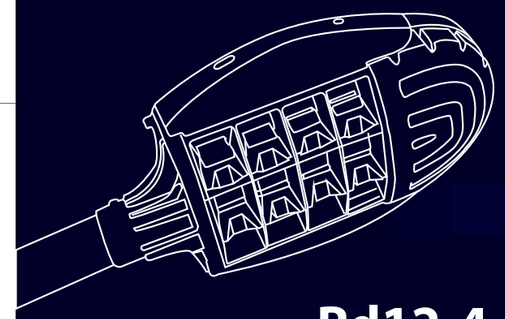

Streetlight 160W

가로등

Rd12-4-M3-R3-B

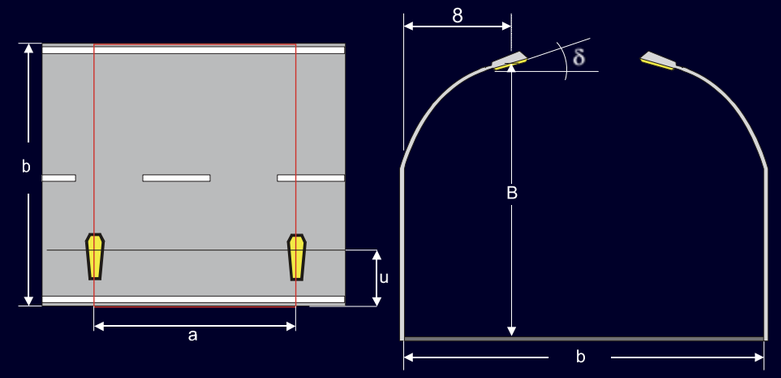

Luminaire data

Manufacturer	: KDG Electronics
Order No	. : 1
Luminaire name	: KDG-SL-16001(L)
Equipment	: 1 x Unknown / 16058 lm

Road layout	: without central reservation	Luminaire placing	: Both sides
Width of roadway	(b) : 14.00 m	photometric centre height.	(h) : 12.00 m
No. of lanes	: 4	Luminaire spacing	(a) : 42.00 m
Road surface category	: R3	Luminaires - outreach	(u) : 1.50 m
q0	: 0.08	Inclination	(d) : 5.00°
Right hand drivers		Maintenance factor	: 0.80

Luminance

Observer location 1	: x=-60.00m, y= 1.75m, z=1.50m	
Average	: 1.67 cd/m²	(ME3b min. 1)
Uo (min/average)	: 0.49	(ME3b min. 0.4)
Observer location 2	: x=-60.00m, y=5.25m, z=1.50m	
Average	: 1.69 cd/m²	(ME3b min. 1)
Uo (min/average)	: 0.52	(ME3b min. 0.4)
Observer location 3	: x=-60.00m, y=8.75m, z=1.50m	
Average	: 1.69 cd/m²	(ME3b min. 1)
Uo (min/average)	: 0.5	(ME3b min. 0.4)
Observer location 4	: x=-60.00m, y=12.25m, z=1.50m	
Average	: 1.68 cd/m²	(ME3b min. 1)
Uo (min/average)	: 0.48	(ME3b min. 0.4)

Longitudinal uniformity

UI (B1: x = -60.00, y = 1.75, z = 1.50)	: 0.43	(ME3b min. 0.6)
UI (B2: x = -60.00, y = 5.25, z = 1.50)	: 0.43	(ME3b min. 0.6)
UI (B3: x = -60.00, y = 8.75, z = 1.50)	: 0.43	(ME3b min. 0.6)
UI (B4: x = -60.00, y = 12.25, z = 1.50)	: 0.43	(ME3b min. 0.6)

Glare/ surrounding brightness

TI (B2: y=5.25m)	: 6 %	(ME3b max. 15)
SR	: 0.71	(ME3b min. 0.5)

Horizontal illuminance E

Height of the reference plane		: 0.00 m
Average illuminance	Eav	: 23.2 lx
Minimum illuminance	Emin	: 15.6 lx
Maximum illuminance	Emax	: 28.8 lx
Uniformity Uo	min/average	: 1 : 1.49 (0.67)
Diversity Ud	min/max	: 1 : 1.85 (0.54)

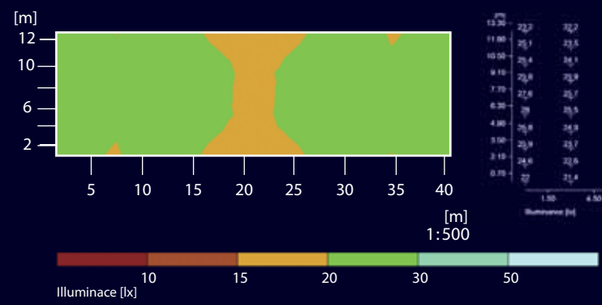

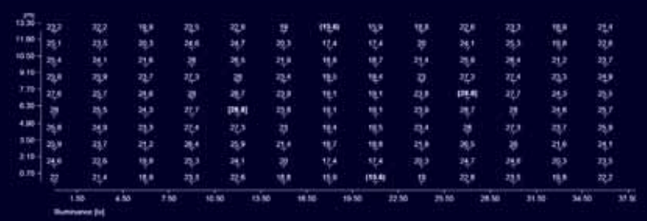

특허 등록 제품 한국기술표준 고효율 기자재

LED Floodlight 투광등

(60/120W TWIN)

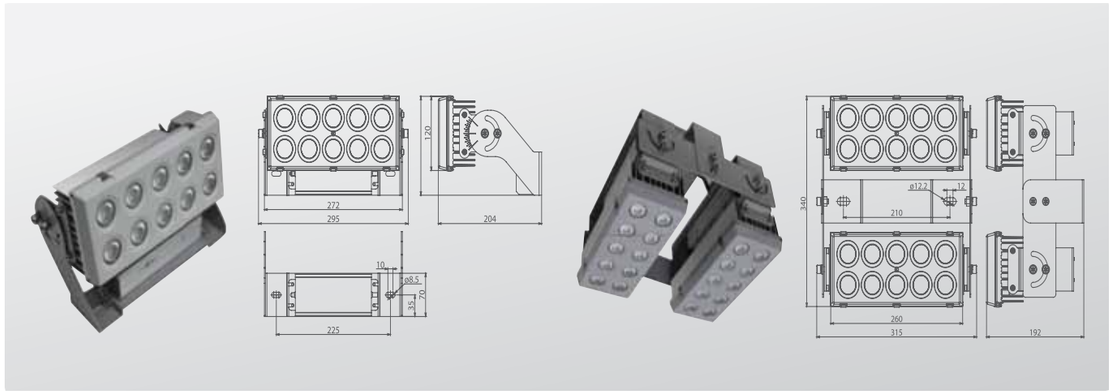

Application

- 컨버터 외장형
- 100W~250W 메탈등 대체
- 공장조명

- External converter type
- For replacement of existing 100~250W metal halide lamp
- Lighting Gymnasium, Factory, etc.

Illumination

luminance Intensity Distribution (120W)

Unit : cd

13° degree 16° degree 24° degree 40° degree 64° degree

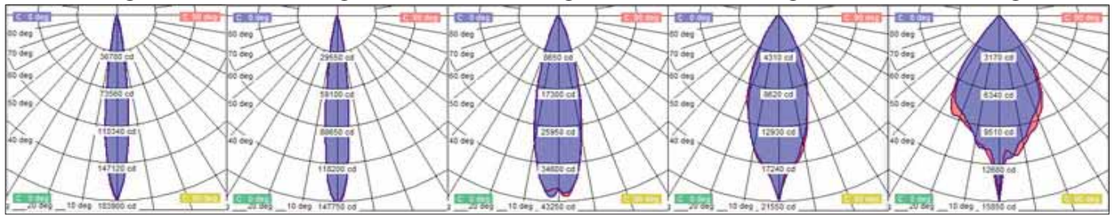

Specification

Model	Color [K]	CRI	Flux [lm]	Efficiency [lm/W]	Beam Angle[°]	Power [W]	Input [VAC]	Lens	Weight [Kg]
KDG-FL-06001	6,000	70	6,480	108~85	13, 16, 24, 40, 64	60	200-240	PMMA	2.9
KDG-FL-06001-1	5,000	70	6,480	108~85		60	200-240	PMMA	2.9
KDG-FL-06001-2	4,300	75	6,120	102~79		60	200-240	PMMA	2.9
KDG-FL-12001T	6,000	70	12,960	108~85		120	200-240	PMMA	6.6
KDG-FL-12001T-1	5,000	70	12,960	108~85		120	200-240	PMMA	6.6
KDG-FL-12001T-2	4,300	75	12,240	102~80		120	200-240	PMMA	6.6

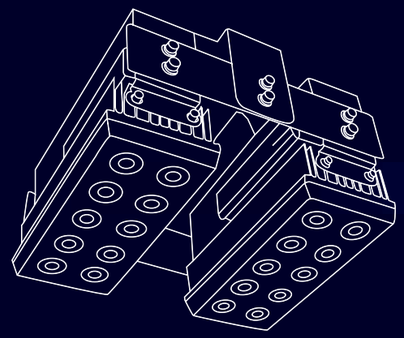

Floodlighting 60/120W Twin

투광등

- For replacement of existing 100~250W metal halide lamp
- Lighting Gymnasium, etc.

조달청 등록 특허 등록 제품 한국기술표준 고효율 기자재

LED Floodlight 투광등
(120W)

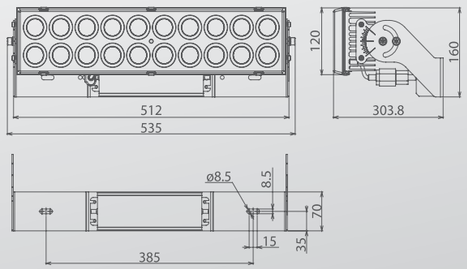

Application

- 컨버터 외장형
- 250W 메탈등 대체
- 공장, 타워, 크레인 조명

- External converter type
- For replacement of existing 250W metal halide lamp
- Lighting Tower, Crane, etc.

Illumination

luminance Intensity Distribution (120W)

Unit : cd

13° degree 16° degree 24° degree 40° degree 64° degree

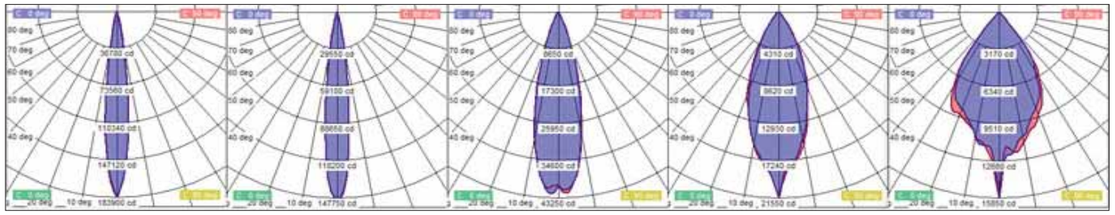

Specification

Model	Color [K]	CRI	Flux [lm]	Efficiency [lm/W]	Beam Angle[°]	Power [W]	Input [VAC]	Lens	Weight [Kg]
KDG-FL-12001	6,000	70	12,960	108~85	13, 16, 24, 40, 64.	120	200-240	PMMA	5.2
KDG-FL-12001-1	5,000	70	12,960	108~85		120	200-240	PMMA	5.2
KDG-FL-12001-2	4,300	75	12,240	102~80		120	200-240	PMMA	5.2

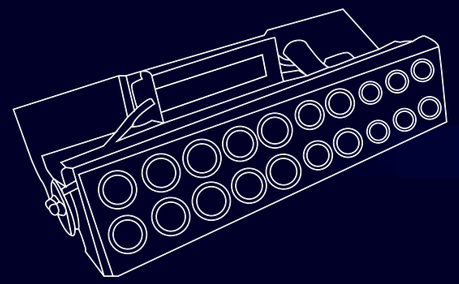

Floodlighting 120W
투광등

- For replacement of existing 250W metal halide lamp
- Lighting Tower, Crane, etc.

조달청 등록 특허 등록 제품 한국기술표준 고효율 기자재

LED Floodlight 투광등
(240W)

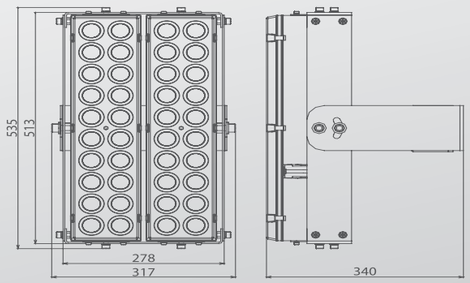

Application

- 컨버터 외장형
- 500W 메탈등 대체
- 운동장, 타워, 크레인 조명

- External converter type
- For replacement of existing 500W metal halide lamp
- Lighting Playground, etc.

Illumination

luminance Intensity Distribution (240W)

Unit : cd

13° degree 16° degree 24° degree 40° degree 64° degree

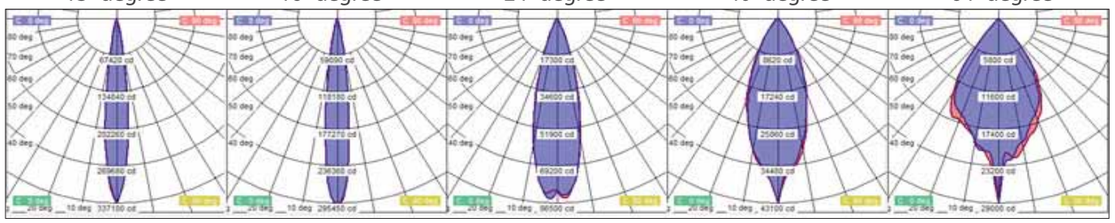

Specification

Model	Color [K]	CRI	Flux [Im]	Efficiency [Im/W]	Beam Angle[°]	Power [W]	Input [VAC]	Lens	Weight [Kg]
KDG-FL-24001	6,000	70	25,920	108~85	13, 16, 24, 40, 64.	240	200-240	PMMA	12.4
KDG-FL-24001-1	5,000	70	25,920	108~85		240	200-240	PMMA	12.4
KDG-FL-24001-2	4,300	75	24,480	102~80		240	200-240	PMMA	12.4

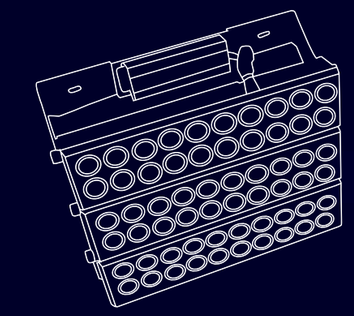

Floodlighting 240W
투광등

- For replacement of existing 500W metal halide lamp
- Lighting Playground, etc.

조달청 등록 특허 등록 제품 한국기술표준 고효율 기자재

LED Floodlight 투광등
(360W)

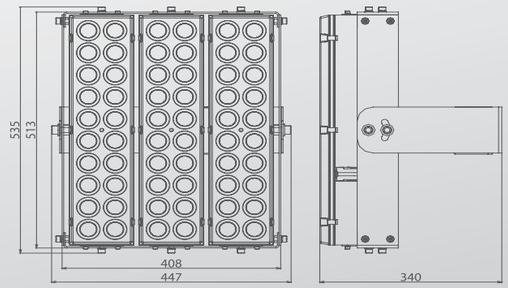

Application

· 컨버터 외장형
· 1KW 메탈등 대체
· 운동장, 타워, 크레인 조명

· External converter type
· For replacement of existing 1KW metal halide lamp
· Lighting Stadium, Tower, Crane, etc.

Illumination

luminance Intensity Distribution (360W)

Unit : cd

13° degree 16° degree 24° degree 40° degree 64° degree

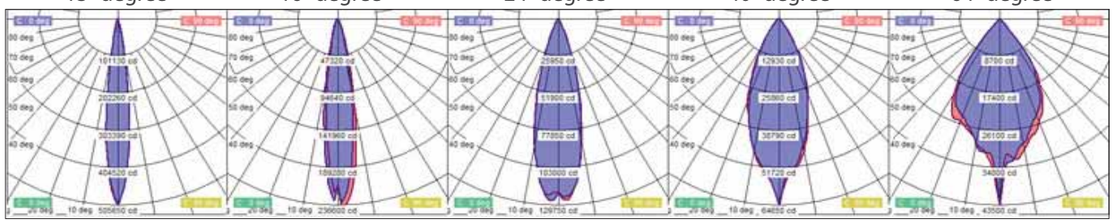

Specification

Model	Color [K]	CRI	Flux [Im]	Efficiency [Im/W]	Beam Angle[°]	Power [W]	Input [VAC]	Lens	Weight [Kg]
KDG-FL-36001	6,000	70	38,880	108~85	13, 16, 24, 40, 64.	360	200-240	PMMA	20.6
KDG-FL-36001-1	5,000	70	38,880	108~85		360	200-240	PMMA	20.6
KDG-FL-36001-2	4,300	75	36,720	102~80		360	200-240	PMMA	20.6

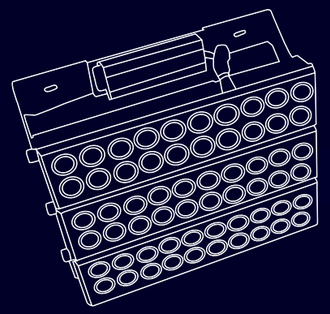

Floodlighting 360W
투광등

- For replacement of existing 1KW metal halide lamp
- Lighting Tower, Crane, etc.

조달청 등록 특허 등록 제품 한국기술표준 고효율 기자재

LED Floodlight 투광등
(500W)

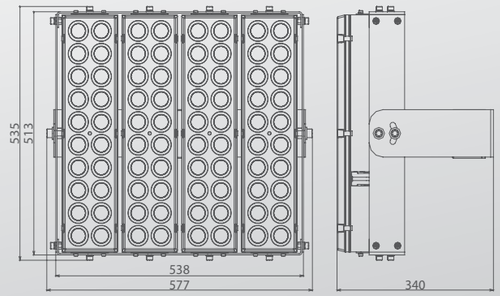

Application

· 컨버터 외장형
· 1KW 메탈등 대체
· 공장, 타워, 크레인 조명

· External converter type
· For replacement of existing 1KW metal halide lamp
· Lighting Stadium, Tower, Crane, etc.

Illumination

luminance Intensity Distribution (500W)

Unit : cd

13° degree 16° degree 24° degree 40° degree 64° degree

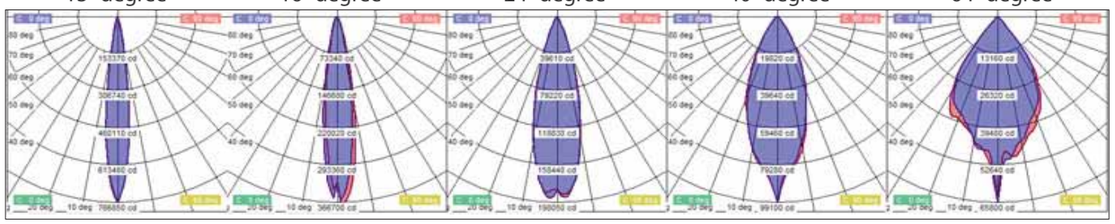

Specification

Model	Color [K]	CRI	Flux [Im]	Efficiency [Im/W]	Beam Angle[°]	Power [W]	Input [VAC]	Lens	Weight [Kg]
KDG-FL-50001	6,000	70	54,000	108~85	13, 16, 24, 40, 64.	500	200-240	PMMA	27
KDG-FL-50001-1	5,000	70	54,000	108~85		500	200-240	PMMA	27
KDG-FL-50001-2	4,300	75	51,000	102~80		500	200-240	PMMA	27

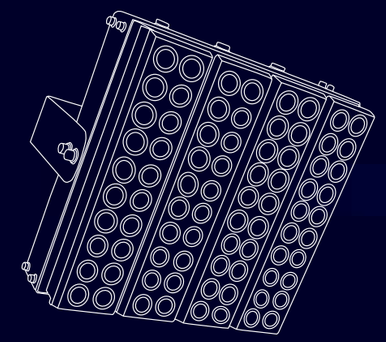

Floodlighting 500W
투광등

- For replacement of existing 1KW metal halide lamp
- Lighting Main stadium, Tower, Crane, etc.

특허 등록 제품 한국기술표준 고효율 기자재

LED Tunnel Light 터널등
(90W)

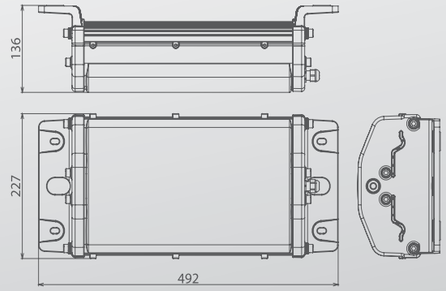

Application

· 컨버터 외장형
· 250W 수은등, 나트륨등 대체
· 터널등용

· External converter type
· For replacement of existing 250W sodium vapor lamp
· For Tunnel lighting

Illumination

luminance Intensity Distribution

Unit : lx (8m) Unit : cd

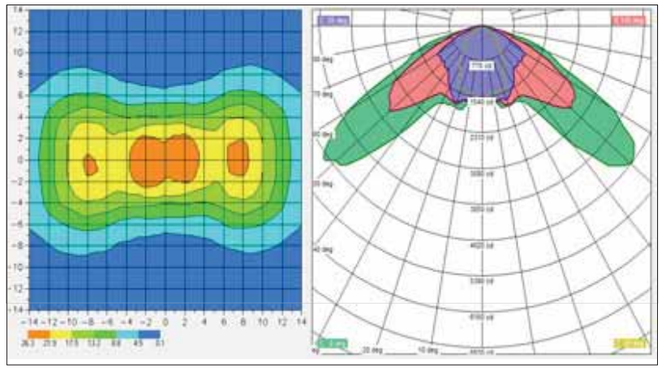

Specification

Model	Color [K]	CRI	Flux [lm]	Efficiency [lm/W]	Beam Angle[°]	Power [W]	Input [VAC]	Lens	Weight [Kg]
KDG-TL-09001	5,700	78	9,000	100	140 Max.	90	200-240	PC	5.1
KDG-TL-09001A	5,000	78	9,000	100	140 Max.	90	200-240	PC	5.1
KDG-TL-09001B	4,000	78	9,000	100	140 Max.	90	200-240	PC	5.1
KDG-TL-09001C	3,000	78	9,000	100	140 Max.	90	200-240	PC	5.1

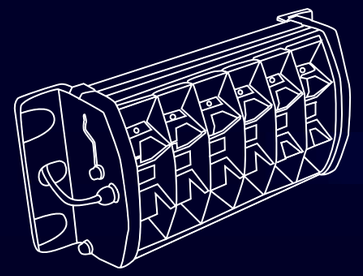

Tunnel Light 90W
터널등

- For replacement of existing 250W metal halide lamp
- For Tunnel lighting

특허 등록 제품 한국기술표준 고효율 기자재

LED Factory Light 공장등

(120/150W REFLECTOR)

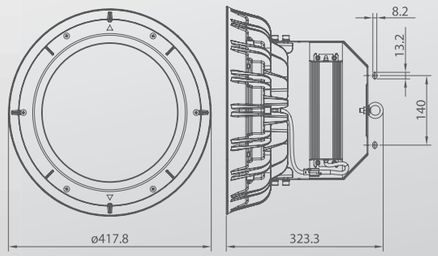

Application

· 컨버터 일체형
· 400W 수은등, 나트륨등 대체
· 공장등용

· External converter type
· For replacement of existing 400W sodium vapor lamp
· For Factory lighting(Low Bay-Light)

Illumination

luminance Intensity Distribution

Unit : cd

120W

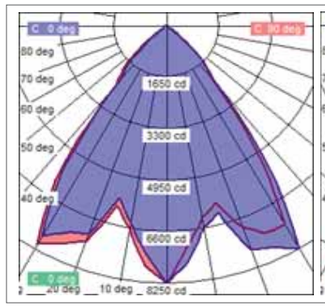

150W

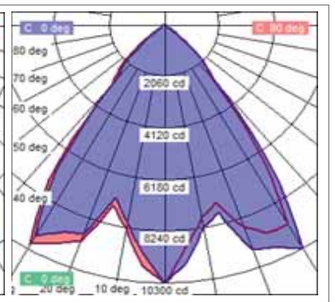

Specification

Model	Color [K]	CRI	Flux [lm]	Efficiency [lm/W]	Beam Angle[°]	Power [W]	Input [VAC]	Lens	Weight [Kg]
KDG-FA-12001	5,000	75	12,000	100	74	120	200-240	PC	6.5
KDG-FA-12001A	5,700	75	12,000	100	74	120	200-240	PC	6.5
KDG-FA-15001	5,000	75	15,000	100	74	120	200-240	PC	6.5
KDG-FA-15001A	5,700	75	15,000	100	74	120	200-240	PC	6.5

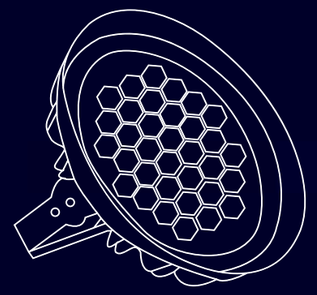

Low Bay Light 6m~12m

공장등

- For replacement of existing 400W sodium vapor lamp
- For Factory lighting(Low Bay-Lighting)

특허 등록 제품 한국기술표준 고효율 기자재

LED Factory Light 공장등

(150W LENS)

Application

- 컨버터 일체형
- 400W 수은등, 나트륨등 대체
- 공장등용

- External converter type
- For replacement of existing 400W sodium vapor lamp
- For Factory lighting

Illumination

luminance Intensity Distribution

Unit : cd

20° degree 26° degree 46° degree 66° degree

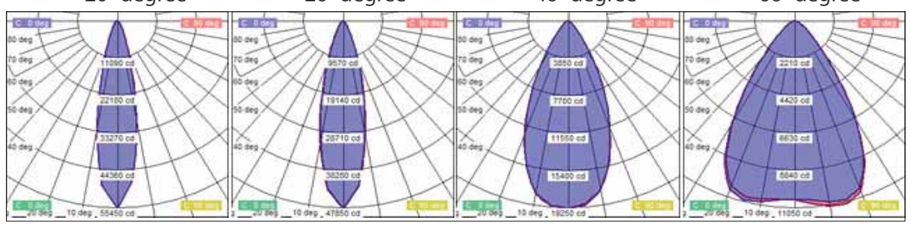

Specification

Model	Color [K]	CRI	Flux [lm]	Efficiency [lm/W]	Beam Angle[°]	Power [W]	Input [VAC]	Lens	Weight [Kg]
KDG-FA-15002	5,000	75	15,000	100	20, 26, 46, 66	150	200-240	PC	6.5
KDG-FA-15002A	5,700	75	15,000	100		150	200-240	PC	6.5

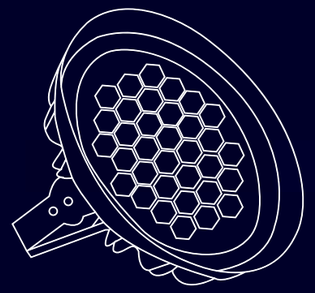

High Bay Light 8m~30m

공장등
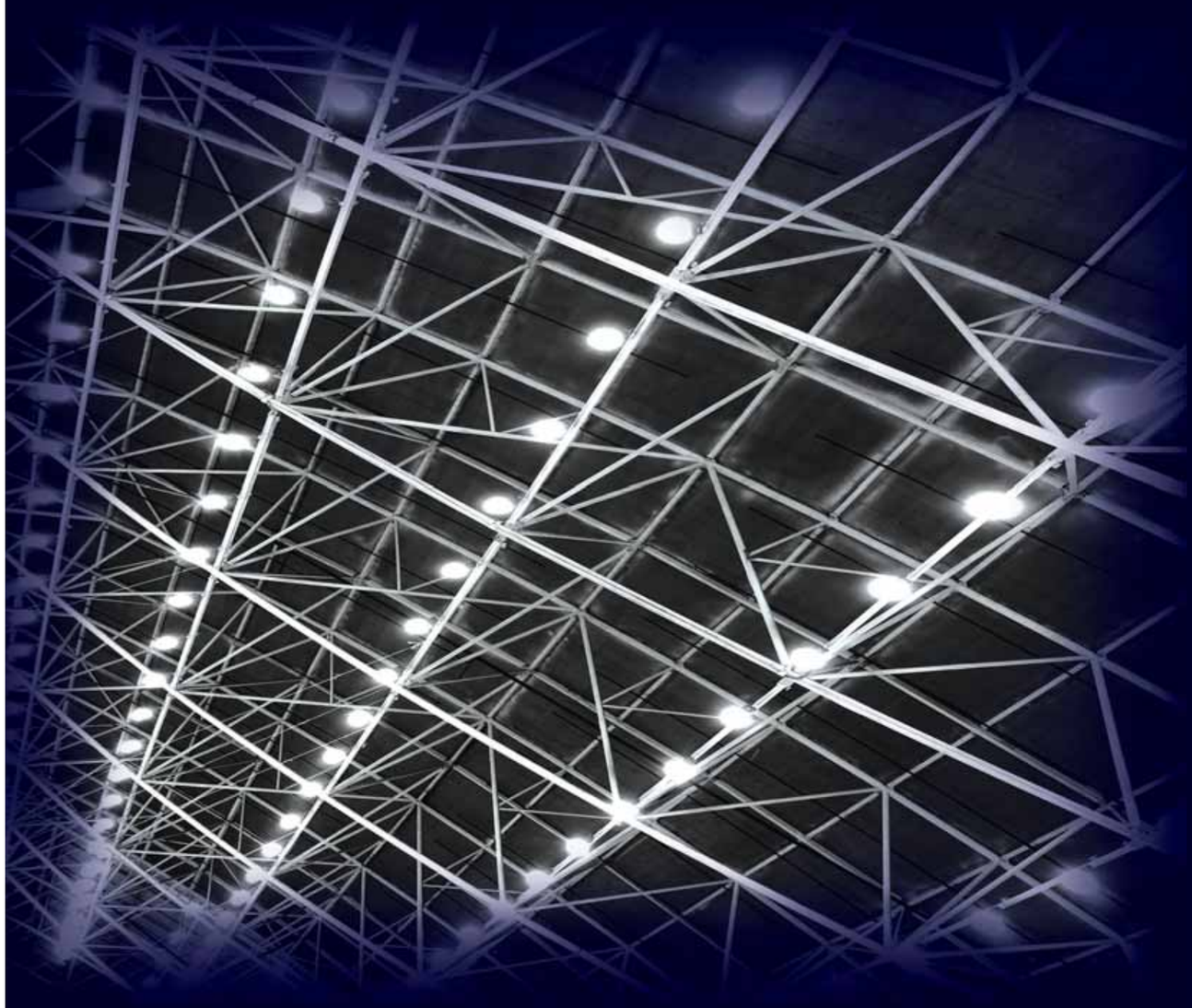
- For replacement of existing 400W sodium vapor lamp
- For Factory lighting(High Bay-Lighting)